DTC	P0500	Vehicle Speed Sensor Malfunction

DTC	P0503	Vehicle Speed Sensor Circuit Malfunction

DESCRIPTION

(See page ES-227).

DTC No.	DTC Detection Condition	Trouble Area
P0500	This trouble code is output when the vehicle speed signal from the vehicle speed sensor is cut for 0.14 sec. or more while the cruise control is in operation.	• Vehicle speed sensor • Vehicle speed sensor signal circuit • ECM
P0503	Momentary interruption and noise are detected when a rapid change of vehicle speed occurs while the cruise control is in operation.	• Vehicle speed sensor • Vehicle speed sensor signal circuit • ECM

WIRING DIAGRAM

(See page ES-229)

INSPECTION PROCEDURE

(See page ES-229)

DTC	P0571	Stop Light Switch Circuit Malfunction

DESCRIPTION

When the brake pedal is depressed, the stop light switch assembly sends a signal to the ECM. When the ECM receives this signal, it cancels the cruise control.
Fail-safe function operates to enable normal driving even if there is a malfunction in the stop light signal circuit.
The cancel condition occurs when positive battery voltage is applied to terminal STP.
When the brake is applied, battery positive voltage is normally applied to terminal STP of the ECM through the STOP fuse and the stop light switch assembly, and the ECM turns the cruise control off.

DTC No.	DTC Detection Condition	Trouble Area
P0571	This trouble code is output when the voltage of the STP terminal and that of the ST1- terminal on the ECM are less than 1 V for 0.5 sec. or more.	• Stop light switch assembly • Stop light switch assembly circuit • ECM

WIRING DIAGRAM

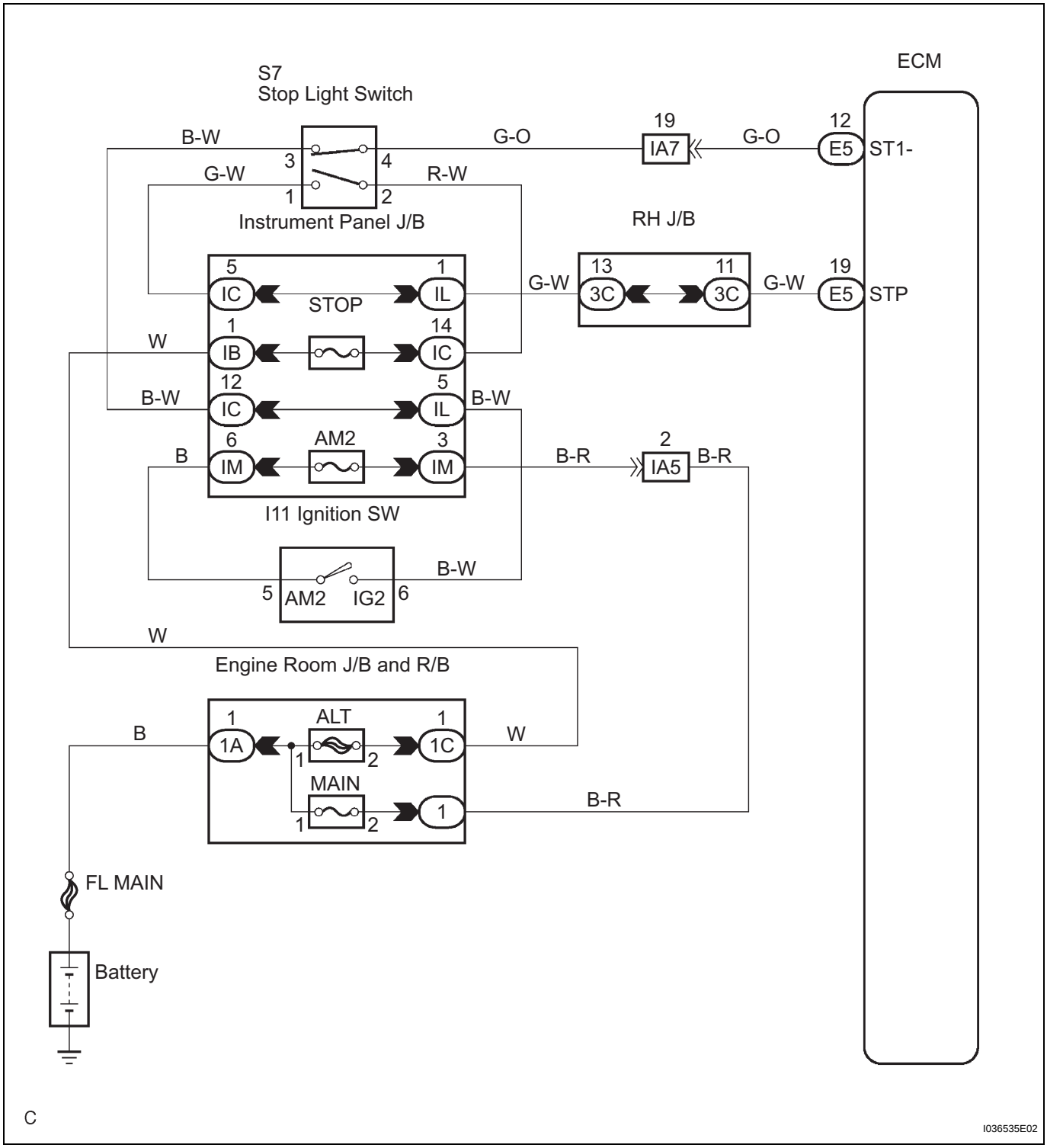

INSPECTION PROCEDURE

1	READ VALUE OF INTELLIGENT TESTER

(a) Connect the intelligent tester to the DLC3.
(b) Turn the ignition switch to the ON position, and turn the intelligent tester main switch on.

(c) Select the item "STP LIGHT SW2 M", "STP LIGHT SW2 S" and "STP LIGHT SW1 S" in the DATA LIST, and read its value displayed on the intelligent tester.

(d) Check that the stop lights come on when the brake pedal is depressed, and go off when the brake pedal is released.

CCS (ECM):

Item	Measurement Item / Display (Range)	Normal Condition	Diagnostic Note
STP LIGHT SW2 M	Stop light SW signal (Main CPU) / ON or OFF	ON: Brake pedal depressed OFF: Brake pedal released	-
STP LIGHT SW2 S	Stop light SW signal (Sub CPU) / ON or OFF	ON: Brake pedal depressed OFF: Brake pedal released	-
STP LIGHT SW1 S	Stop light SW signal (Sub CPU) / ON or OFF	ON: Brake pedal depressed OFF: Brake pedal released	-

CC

OK:

When the brake pedal is operated, the normal conditions listed above are shown on the display.

Result

Result	Proceed to
NG	**A**
OK (When troubleshooting according to the PROBLEM SYMPTOM TABLE)	**B**
OK (When troubleshooting according to the DTC chart)	**C**

B → **PROCEED TO NEXT CIRCUIT INSPECTION SHOWN IN PROBLEM SYMPTOMS TABLE**

C → **REPLACE ECM**

A

2 INSPECT STOP LIGHT SWITCH ASSEMBLY

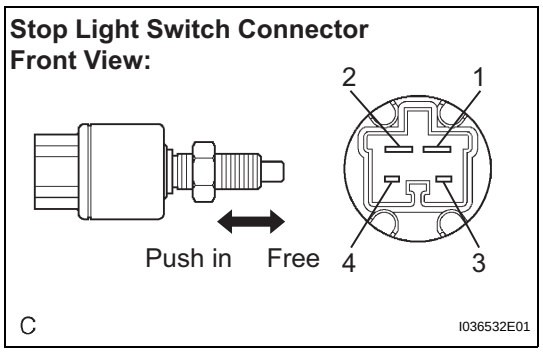

(a) Disconnect the stop light switch assembly connector.

(b) Measure the resistance according to the values in the table below.

Resistance

Switch condition	Tester connection	Specified value
Switch pin free	**1 - 2**	**Below 1 Ω**
Switch pin free	**3 - 4**	**10 kΩ or higher**
Switch pin pushed in	**1 - 2**	**10 kΩ or higher**
Switch pin pushed in	**3 - 4**	**Below 1 Ω**

NG → **REPLACE STOP LIGHT SWITCH ASSEMBLY**

OK

3 CHECK HARNESS AND CONNECTOR

Stop Light Switch Wire Harness Side Connector Front View:

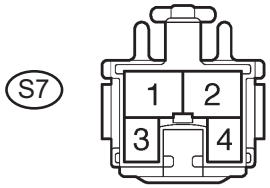

N I039310E07

(a) Measure the voltage according to the value(s) in the table below.
Voltage

Tester connection	Condition	Specified condition
S7-2 - Body ground	Always	10 to 14 V
S7-3 - Body ground	Ignition SW ON	10 to 14 V

NG → **REPAIR OR REPLACE HARNESS AND CONNECTOR**

OK

4 INSPECT ECM

Wire Harness Side:

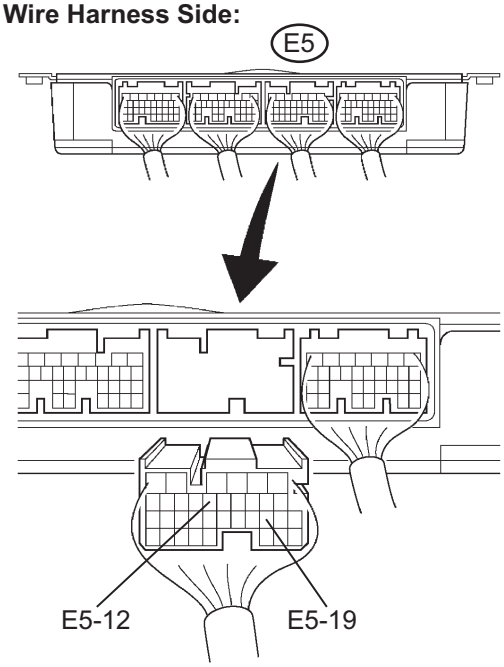

C I036534E01

(a) Reconnect the stop light switch connector.
(b) Disconnect the connector from the ECM.
(c) Turn the ignition switch to the ON position.
(d) Measure the voltage according to the value(s) in the table below.
Voltage

Tester connection	Condition	Specified condition
E5-19 (STP) - Body ground	Brake pedal depressed	10 to 14 V
E5-19 (STP) - Body ground	Brake pedal released	Below 1 V
E5-12 (ST1-) - Body ground	Brake pedal depressed	Below 1 V
E5-12 (ST1-) - Body ground	Brake pedal released	10 to 14 V

NG → **REPAIR OR REPLACE HARNESS AND CONNECTOR**

OK

REPLACE ECM

CC